40W Ext. Low Ku-Band Block Up Converter

KEY FEATURES

- Output frequency 12.75-13.50 GHz
- Double L.O. (switchable 11.80 & 12.05 GHz)
- Based on GaN technology which enables high efficiency, low power consumption and high reliability
- Incomparable low power consumption (192 W max.)
- Auto-ranging powering option 180 - 260 VAC
- Digital temperature compensation
- Field-exchangeable (F/N) IF connector
- Internal auto-sensing and controllable 10MHz high stability reference (optional)
- Built-in redundancy option
- M&C - combined RS-232/485 and optional FSK
- Ethernet control (HTTP and SNMP ver. 2 and 3)
- RoHS compliant

ABD40SKXL / ABD40SKXLF

This smallest and lightest 40W L-To Low Ku-Band Block Up Converter is based on GaN technology. Incomparable low power consumption, double L.O., field-exchangeable connector, auto-sensing and controllable internal 10 MHz reference make this unit universal for any Low Ku-Band application. M&C (FSK) capability enables troubleshooting, monitoring and controlling the BUC.

Mechanical Drawing

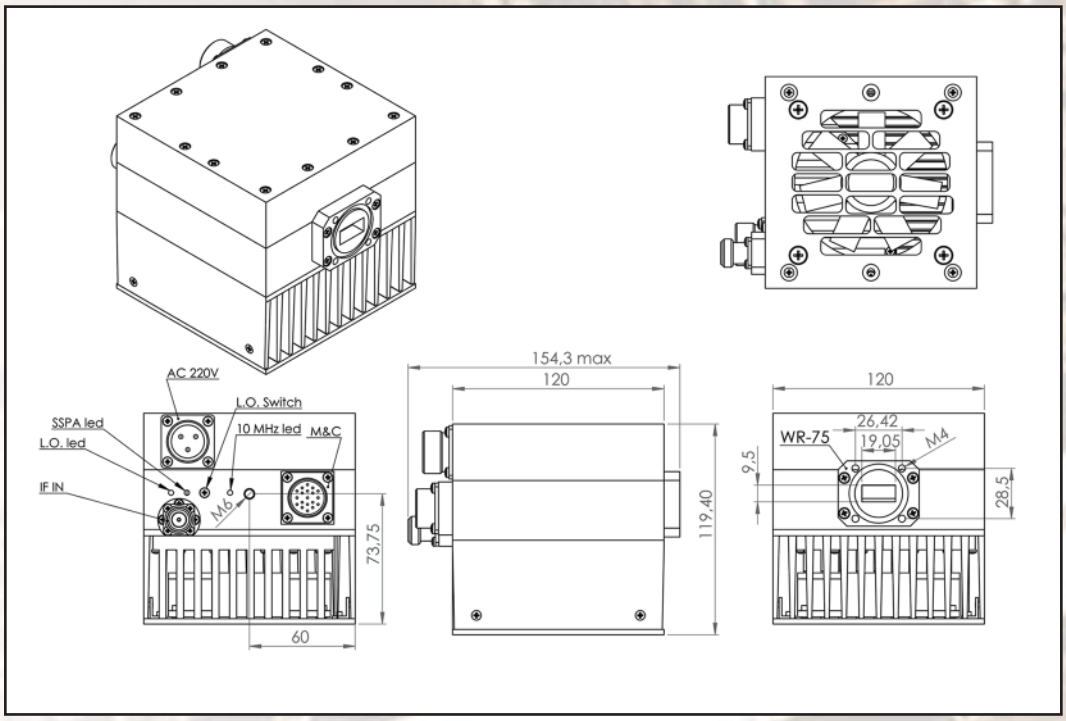

40W Ext. Low Ku-Band Block Up Converter

TECHNICAL SPECIFICATIONS	
RF frequency	13.00 to 13.50 GHz 12.75 to 13.50 GHz
Dual local oscillator	12.05 GHz and 11.80 GHz
IF frequency	950 to 1,700 MHz
Output power	40W (45.5 dBm min, 46 dBm typ.) 20W P-Linear (43 dBm min.)
IF connector	N-type or F-type (field-exchangeable)
Power supply auto-ranging	180 ~ 260 VAC via MS connector, 192 W max.
Output interface	WR-75 G
Gain	67 dB min., 70 dB nominal
IMD3 (two tones)	-26 dBc max. 2 signal 5 MHz apart at P-LINEAR
L.O. leakage	-45 dBm max.
Spurious	-53 dBc max.
Spectral regrowth (QPSK at 1.5x and OQPSK at 1.0x symbol rate offset with 2dB back-off from rated output power)	-30 dBc
Requirement for external reference: frequency input power	via IF cable 10 MHz (sine-wave) -5 to +5 dBm @ input port
TX Gain variation **TX Gain stability over temperature range**	± 0.5 dB over 40 MHz ± 1.8 dB over full band ± 1.5 dB typ., ± 1.8 dB max.
Phase noise (Exceeds Intelsat's standard IESS308/309)	-55 dBc/Hz max. @ 10 Hz
	-65 dBc/Hz max. @ 100 Hz
	-75 dBc/Hz max. @ 1 KHz
	-85 dBc/Hz max. @ 10 KHz
	-95 dBc/Hz max. @ 100 KHz
	-115 dBc/Hz max. @ 1 MHz
Noise power density **Transmit** **Receive**	-66 dBm/Hz (max.) -157 dBm/Hz (max.)
Noise figure	15 dB max.
Input V.S.W.R.	1.5 : 1 max.
Output V.S.W.R.	1.5 : 1 max.
M&C	RS-232 and RS-485, Ethernet (HTTP and SNMP), FSK
Mute	Shut off the HPA if L.O. unlocked
Status LED **Amplifier** **RED** **GREEN** **L.O.** **GREEN** **GREEN blinking** **10MHz** **GREEN** **GREEN blinking** **RED**	 Summary alarm All OK All OK standard L.O. 12.05 GHz All OK extended L.O. 11.80 GHz External 10MHz reference Internal 10MHz reference No 10MHz reference detected
Temperature range (ambient) operating storage	 -40 deg C to +55 deg C -55 deg C to +85 deg C
Vibration and shock	Complies with MIL-STD-810E
IP rating	IP67
Dimensions & housing	120 (L) x 120 (W) x 119 (H) mm 4.72" (L) x 4.72" (W) x 4.70" (H)
Weight	2.4 kg (5.4 lbs) max.

Actox Corporation *Phone/Fax: 866-888-6087* *www.actox.com* *sales@actox.com*